RESOURCE ENGIMECH (INDIA) PVT LTD.
BARODA - 390010, INDIA.
E MAIL :- info@resource.co.in.
FAX NO:- +91-265-2638048

CUSTOMER NAME :-

DATA SHEET NO-21 FOR (FLANGE MOUNTING)
ADJUSTABLE SLIDING SAFETY CHUCK -SC40 SL

ALL DIMENSION IN MM

SCALE N.T.S.

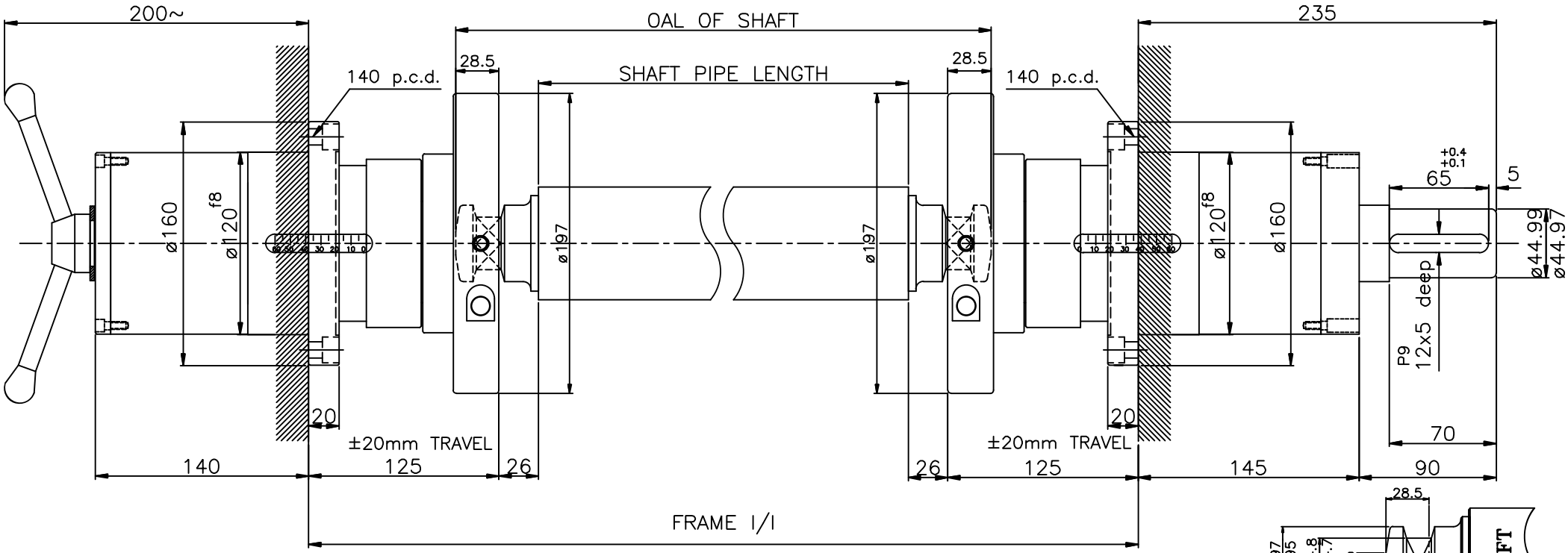


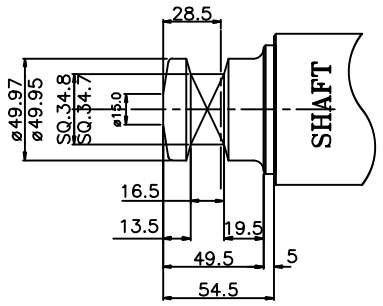


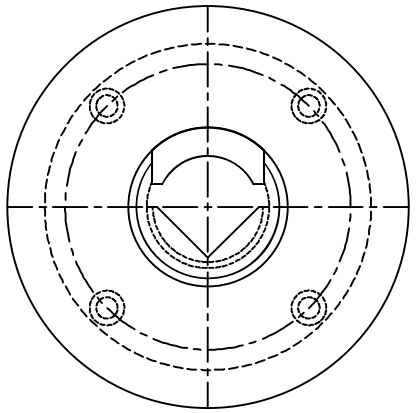

* SHAFT PIPE LENGTH= FRAM I/I-302

* SHAFT OAL LENGTH= FRAM I/I-193

| MODEL | SIZE | QTY. | EQUISPACD ON PCD |
|---|---|---|---|
| SC-40SL | M10 | 4 | 140 |
| | | | |

| BASIC CUSTOMER FEEDBACK | |
|---|---|
| PRESENT GRIPPING WIDTH:- | CORE INNER DIAMETER:- |
| MACHINE NAME:- | COLLAPSED SHAFT DIAMETER:- |
| MAX GRIPPING WIDTH:- | EXPANDED SHAFT DIAMETER:- |
| MIN GRIPPING WIDTH:- | SPEED :- |
| LOAD :- | CORE MATERIAL :- |

FOR IMPROVEMENT & MODIFICATION RESOURCE HAS RIGHT TO CHANGE DIMENSION WITHOUT PRIOR NOTICE.

| | | | | |
|---|---|---|---|---|
| RESOURCE ENGIMECH (INDIA) PVT LTD.<br>BARODA – 390010, INDIA. | CUSTOMER NAME :- | | | |
| E MAIL :- info@resource.co.in.<br>FAX NO:- +91-265-2638048 | DATA SHEET NO-27 FOR (FOOT MOUNTING)<br>ADJUSTABLE SLIDING SAFETY CHUCK -SC40 SL | ALL DIMENSION IN MM | | SCALE N.T.S. |

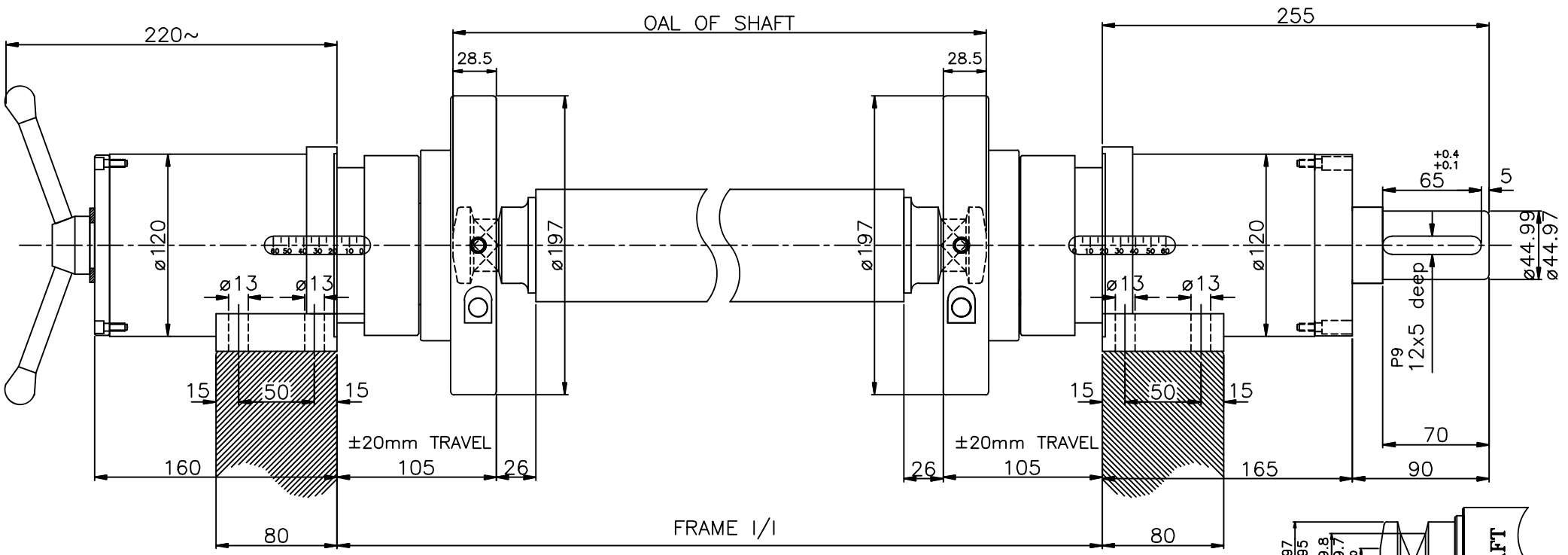


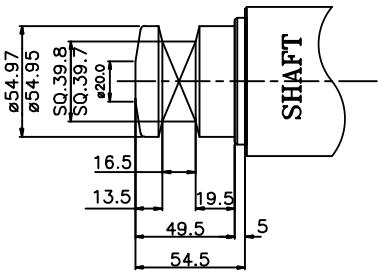


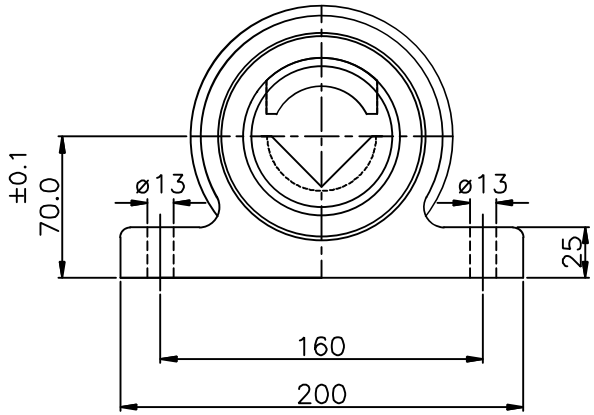


* SHAFT PIPE LENGTH= FRAM I/I-262

* SHAFT OAL LENGTH= FRAM I/I-153

| BASIC CUSTOMER FEEDBACK | |
|---|---|
| PRESENT GRIPPING WIDTH:- | CORE INNER DIAMETER:- |
| MACHINE NAME:- | COLLAPSED SHAFT DIAMETER:- |
| MAX GRIPPING WIDTH:- | EXPANDED SHAFT DIAMETER:- |
| MIN GRIPPING WIDTH:- | SPEED :- |
| LOAD :- | CORE MATERIAL :- |

FOR IMPROVEMENT & MODIFICATION RESOURCE HAS RIGHT TO CHANGE DIMENSION WITHOUT PRIOR NOTICE.